32312 000 TL1899A 01

ASSEMBLY INSTRUCTION FOR TL-1899A RECTANGULAR TABLE

1

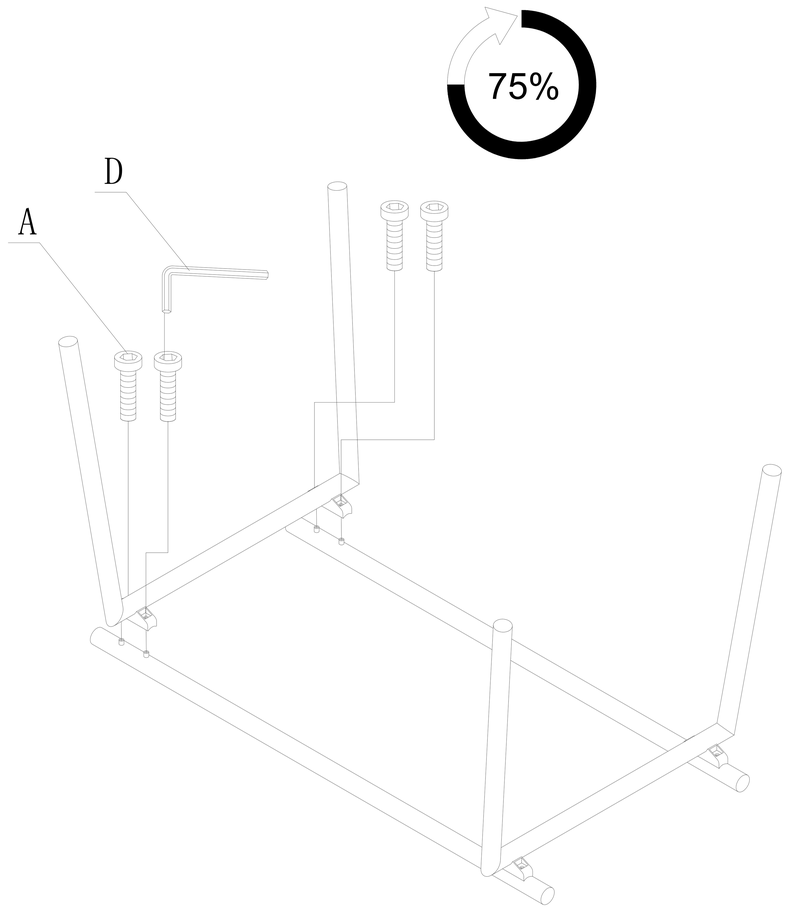

2

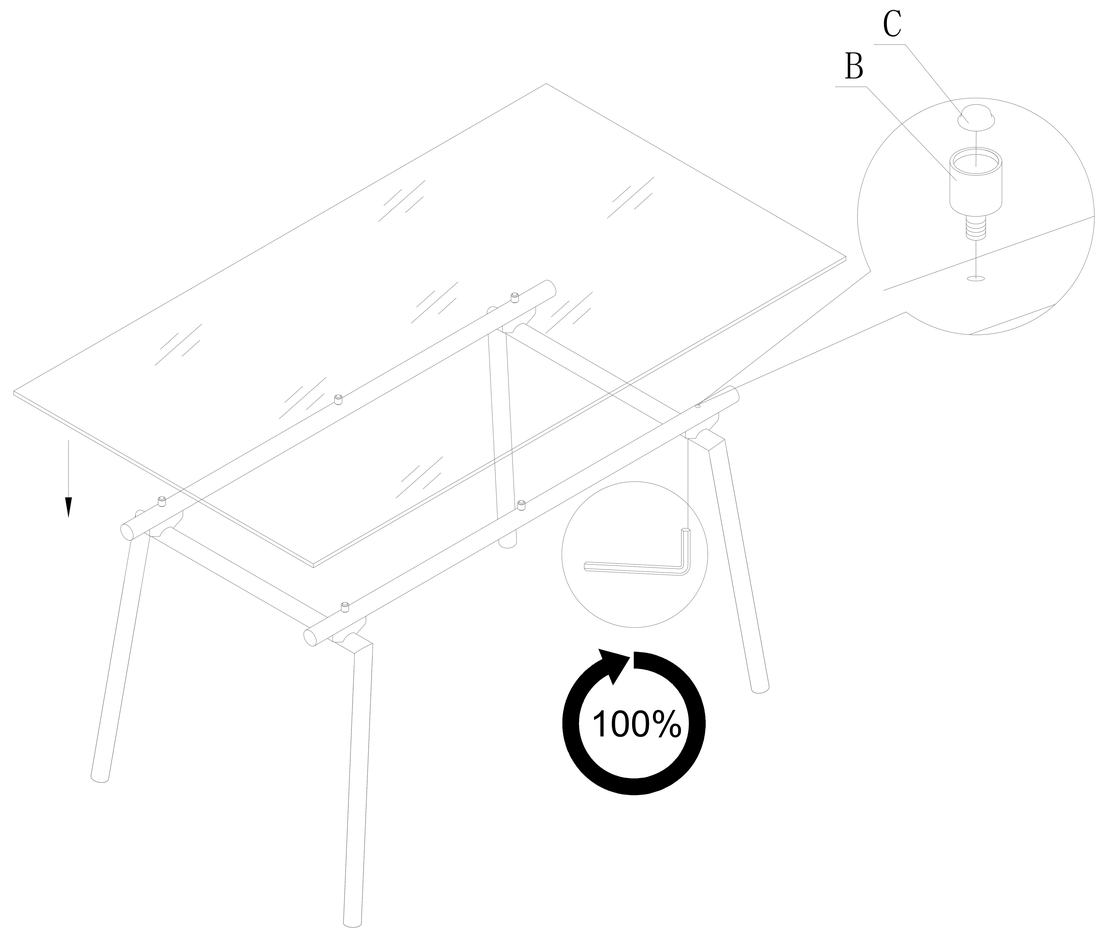

A	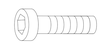	8
B	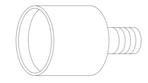	6
C		6
D		1